TROY-BILT®

Pressure Washer

Operator's Manual

This pressure washer is rated in accordance to the Pressure Washer Manufacturers Association (PWMA) standard PW101-2010 (Testing and Rating Performance of Pressure Washers).

BRIGGS & STRATTON POWER PRODUCTS GROUP, LLC
MILWAUKEE, WISCONSIN, U.S.A.

0 24847 91487 0

Manual No. 319222GS Revision -

Thank you for purchasing this quality-built Troy-Bilt pressure washer. We are pleased that you've placed your confidence in the Troy-Bilt brand. When operated and maintained according to the instructions in this manual, your Troy-Bilt pressure washer will provide many years of dependable service.

This manual contains safety information to make you aware of the hazards and risks associated with pressure washers and how to avoid them. Because Troy-Bilt does not necessarily know all the applications this pressure washer could be used for, it is important that you read and understand these instructions thoroughly before attempting to start or operate this equipment. **Save these original instructions for future reference.**

This pressure washer requires final assembly before use. Refer to the *Assembly* section of this manual for instructions on final assembly procedures. Follow the instructions completely.

Where to Find Us

You never have to look far to find Briggs & Stratton support and service for your pressure washer. Consult your Yellow Pages. There are over 30,000 Briggs & Stratton authorized service dealers worldwide who provide quality service. You can also contact Troy-Bilt Customer Service by phone at **(888) 611-6708**, or on the Internet at www.troybilt.com.

Pressure Washer

Model Number

Revision

Serial Number

Engine

Model Number

Type Number

Code Number

Date Purchased

Copyright © 2012. Briggs & Stratton Corporation
Milwaukee, WI, USA. All rights reserved.
TROY-BILT is a registered trademark of MTD.
Used under license.

Table of Contents

Operator Safety 4
Equipment Description. 4
Important Safety Information. 4

Assembly 7
Unpack Pressure Washer. 7
Attach Handle and Accessory Tray 7
Add Engine Oil 8
Add Fuel. 8
Lubricate O-Rings 9
Connect Hose and Water Supply to Pump. 10

Features and Controls 11

Operation 12
Pressure Washer Location. 12
How to Start Your Pressure Washer 12
How to Stop Your Pressure Washer 14
How to Use Accessory Tray. 14
How to Use Spray Tips 14
Cleaning and Applying Detergent. 15
Pressure Washer Rinsing 15
Cleaning Detergent Siphoning Tube. 15
Automatic Cool Down System (Thermal Relief). 15

Maintenance 16
Maintenance Schedule. 16
Pressure Washer Maintenance 16
Engine Maintenance. 18
After Each Use 20
Winter Storage. 21
Long Term Storage 21

Troubleshooting 22

Warranties. 23
Emissions Control System Warranty 23
Pressure Washer Owner Warranty. 25

Specifications 26
Product Specifications. 26
Common Service Parts 26

Operator Safety

Equipment Description

Read this manual carefully and become familiar with your pressure washer. Know its applications, its limitations, and any hazards involved.

This pressure washer operates at 2,200 PSI (151.7 BARS) and a flow rate of 1.8 gallons per minute (6.8 liters per minute). This high quality residential system features 10" (25.4 cm) wheels, axial cam pump with stainless steel pistons, automatic cool down system, detergent siphoning system, quick connect spray tips, heavy duty 25' (7.6 m) hose, and more.

Every effort has been made to ensure that information in this manual is accurate and current. However, we reserve the right to change, alter, or otherwise improve the product and this document at any time without prior notice.

The Emission Control System for this pressure washer is warranted for standards set by the Environmental Protection Agency and the California Air Resources Board.

Important Safety Information

Safety Symbols and Meanings

▲ The safety alert symbol indicates a potential personal injury hazard. A signal word (DANGER, WARNING, or CAUTION) is used with the alert symbol to designate a degree or level of hazard seriousness. A safety symbol may be used to represent the type of hazard. The signal word *NOTICE* is used to address practices not related to personal injury.

▲ **DANGER** indicates a hazard which, if not avoided, *will* result in death or serious injury.

▲ **WARNING** indicates a hazard which, if not avoided, *could* result in death or serious injury.

▲ **CAUTION** indicates a hazard which, if not avoided, *could* result in minor or moderate injury.

NOTICE address practices not related to personal injury.

▲ **WARNING** POISONOUS GAS HAZARD. Engine exhaust contains carbon monoxide, a poisonous gas that could kill you in minutes. You CANNOT smell it, see it, or taste it. Even if you do not smell exhaust fumes, you could still be exposed to carbon monoxide gas.

Some chemicals or detergents could be harmful if inhaled or ingested, resulting in death, serious injury, nausea, fainting or poisoning.

- Operate this product ONLY outside far away from windows, doors and vents to reduce the risk of carbon monoxide gas from accumulating and potentially being drawn towards occupied spaces.
- Install battery-operated carbon monoxide alarms or plug-in carbon monoxide alarms with battery back-up according to the manufacturer's instructions. Smoke alarms cannot detect carbon monoxide gas.
- DO NOT run this product inside homes, garages, basements, crawlspaces, sheds, or other partially-enclosed spaces even if using fans or opening doors and windows for ventilation. Carbon monoxide can quickly build up in these spaces and can linger for hours, even after this product has shut off.
- ALWAYS place this product downwind and point the engine exhaust away from occupied spaces.

If you start to feel sick, dizzy, or weak while using this product, shut it off and get to fresh air RIGHT AWAY. See a doctor. You may have carbon monoxide poisoning.

- Use a respirator or mask whenever there is a chance that vapors may be inhaled when using chemicals.
- Read all instructions with mask so you are certain the mask will provide the necessary protection against inhaling harmful vapors when using chemicals.

⚠ WARNING The engine exhaust from this product contains chemicals known to the State of California to cause cancer, birth defects, or other reproductive harm.

⚠ WARNING This product contains lead and lead compounds, known to the State of California to cause birth defects or other reproductive harm. *Wash your hands after handling this product.*

⚠ WARNING Exhaust heat/gases could ignite combustibles, structures or damage fuel tank causing a fire, resulting in death or serious injury.

Contact with muffler area could cause burns resulting in serious injury.

- DO NOT touch hot parts and AVOID hot exhaust gases.
- Allow equipment to cool before touching.
- Keep at least 5 feet (1.5 m) of clearance on all sides of pressure washer including overhead.
- It is a violation of California Public Resource Code, Section 4442, to use or operate the engine on any forest-covered, brush-covered, or grass-covered land unless the exhaust system is equipped with a spark arrester, as defined in Section 4442, maintained in effective working order. Other states or federal jurisdictions may have similar laws.

  Contact the original equipment manufacturer, retailer, or dealer to obtain a spark arrester designed for the exhaust system installed on this engine.
- Replacement parts must be the same and installed in the same position as the original parts.

⚠ WARNING Risk of electrocution. Contact with power source could cause electric shock or burn resulting in death or serious injury.

- NEVER spray near power source.

⚠ WARNING Use of pressure washer could create puddles and slippery surfaces causing you to fall resulting in death or serious injury.

Kickback from spray gun could cause you to fall resulting in death or serious injury.

- Operate pressure washer from a stable surface.
- The cleaning area should have adequate slopes and drainage to reduce the possibility of a fall due to slippery surfaces.
- Be extremely careful if you must use the pressure washer from a ladder, scaffolding, or any other similar location.
- Firmly grasp spray gun with both hands when using high pressure spray to avoid injury when spray gun kicks back.

⚠ WARNING Fuel and its vapors are extremely flammable and explosive which could cause burns, fire or explosion resulting in death or serious injury.

WHEN ADDING OR DRAINING FUEL

- Turn pressure washer engine OFF and let it cool at least 2 minutes before removing fuel cap. Loosen cap slowly to relieve pressure in tank.
- Fill or drain fuel tank outdoors.
- DO NOT overfill tank. Allow space for fuel expansion.
- If fuel spills, wait until it evaporates before starting engine.
- Keep fuel away from sparks, open flames, pilot lights, heat, and other ignition sources.
- Check fuel lines, tank, cap and fittings frequently for cracks or leaks. Replace if necessary.
- DO NOT light a cigarette or smoke.

WHEN STARTING EQUIPMENT

- Ensure spark plug, muffler, fuel cap, and air cleaner are in place.
- DO NOT crank engine with spark plug removed.

WHEN OPERATING EQUIPMENT

- DO NOT operate this product inside any building, carport, porch, mobile equipment, marine applications, or enclosure.
- DO NOT tip engine or equipment at angle which causes fuel to spill.
- DO NOT spray flammable liquids.

WHEN TRANSPORTING, MOVING OR REPAIRING EQUIPMENT

- Transport/move/repair with fuel tank EMPTY or with fuel shutoff valve OFF.
- DO NOT tip engine or equipment at angle which causes fuel to spill.
- Disconnect spark plug wire.

WHEN STORING FUEL OR EQUIPMENT WITH FUEL IN TANK

- Store away from furnaces, stoves, water heaters, clothes dryers, or other appliances that have pilot light or other ignition source because they could ignite fuel vapors.

⚠ WARNING Starter cord kickback (rapid retraction) will pull hand and arm toward engine faster than you can let go which could cause broken bones, fractures, bruises, or sprains resulting in serious injury.

- NEVER pull starter cord without first relieving spray gun pressure.
- When starting engine, pull cord slowly until resistance is felt and then pull rapidly to avoid kickback.
- After each starting attempt, where engine fails to run, always point spray gun in safe direction, press red button and squeeze spray gun trigger to release high pressure.
- Firmly grasp spray gun with both hands when using high pressure spray to avoid injury when spray gun kicks back.

⚠ WARNING Chemical Burn Hazard. Chemicals could cause burns resulting in death or serious injury.

- DO NOT use caustic liquid with pressure washer.
- Use ONLY pressure washer safe detergents/soaps. Follow all manufacturers instructions.

⚠ WARNING The high pressure stream of water that this equipment produces could cut through skin and its underlying tissues, resulting in serious injury and possible amputation.

Spray gun traps high water pressure, even when engine is stopped and water is disconnected, which could result in serious injury.

- If cut by fluid, call physician immediately. DO NOT treat as a simple cut.
- DO NOT allow CHILDREN to operate pressure washer.
- NEVER repair high pressure hose. Replace it.
- NEVER repair leaking connections with sealant of any kind. Replace o-ring or seal.
- NEVER connect high pressure hose to nozzle extension.
- Keep high pressure hose connected to pump and spray gun while system is pressurized.
- ALWAYS point spray gun in safe direction, press red button and squeeze spray gun trigger to release high pressure, every time you stop engine.
- NEVER aim spray gun at people, animals, or plants.
- DO NOT secure spray gun in open position.
- DO NOT leave spray gun unattended while machine is running.
- NEVER use a spray gun which does not have a trigger lock or trigger guard in place and in working order.
- Always be certain spray gun, nozzles and accessories are correctly attached.

⚠ WARNING Unintentional sparking could cause fire or electric shock resulting in death or serious injury.

WHEN ADJUSTING OR MAKING REPAIRS TO YOUR PRESSURE WASHER

- Disconnect the spark plug wire from the spark plug and place the wire where it cannot contact spark plug.

WHEN TESTING FOR ENGINE SPARK

- Use approved spark plug tester.
- DO NOT check for spark with spark plug removed.

⚠ WARNING Starter and other rotating parts could entangle hands, hair, clothing, or accessories resulting in serious injury.

- NEVER operate pressure washer without protective housing or covers.
- DO NOT wear loose clothing, jewelry or anything that could be caught in the starter or other rotating parts.
- Tie up long hair and remove jewelry.

⚠ WARNING Risk of eye or bodily injury. Spray could splash back or propel objects resulting in serious injury.

- Always wear indirect vented (chemical splash) safety goggl marked to comply with ANSI Z87.1 when using or in vicinit this equipment.
- NEVER substitute safety glasses or dry-condition goggles f indirect vented safety goggles.
- Always wear protective clothing such as a long-sleeved shir long pants and close-toed shoes.
- NEVER operate pressure washer when barefoot or wearing sandals or shorts.

⚠ CAUTION Excessively high operating speeds could result in minor injury.

Excessively low speeds impose a heavy load.

- DO NOT tamper with governor spring, links or other parts t increase engine speed. Pressure washer supplies correct rat pressure and flow when running at governed speed.
- DO NOT modify pressure washer in any way.

NOTICE High pressure spray could damage fragile item including glass.

- DO NOT point spray gun at glass when using red (0°) spray ti
- NEVER aim spray gun at plants.

NOTICE Improper treatment of pressure washer could damage it and shorten its life.

- If you have questions about intended use, ask dealer or contac qualified service center.
- NEVER operate units with broken or missing parts, or without protective housing or covers.
- DO NOT by-pass any safety device on this machine.
- DO NOT tamper with governed speed.
- DO NOT operate pressure washer above rated pressure.
- DO NOT modify pressure washer in any way.
- Before starting pressure washer in cold weather, check all part the equipment to be sure ice has not formed there.
- NEVER move machine by pulling on hoses. Use handle provide on unit.
- This equipment is designed to be used with Briggs & Stratton Power Products authorized parts **ONLY**. If equipment is used w parts that DO NOT comply with minimum specifications, user assumes all risks and liabilities.

Assembly

Read entire operator's manual before you attempt to assemble or operate your new pressure washer.

Your pressure washer requires some assembly and is ready for use after it has been properly serviced with the recommended oil and fuel.

If you have any problems with the assembly of your pressure washer, please call the pressure washer helpline at **(888) 611-6708**. If calling for assistance, please have the model, revision, and serial number from the identification label available.

Unpack Pressure Washer

1. Remove the parts bag, accessories, and inserts included with pressure washer.
2. Open carton completely by cutting each corner from top to bottom.
3. Ensure you have all included items prior to assembly.

Items in the carton include:

- Main Unit
- Handle
- High Pressure Hose
- Spray Gun
- Nozzle Extension with Quick Connect Fitting
- Plastic Accessory Tray
- Oil Pouch
- Parts Bag (which includes the following):
  - Operator's Manual
  - Owner's Registration Card
  - Bag containing 3 Multi–Colored Spray Tips
  - Handle Fastening Hardware Kit (which includes):
    - Carriage Bolts (2)
    - Plastic Knobs (2)
    - Tree Clips (4)

To prepare your pressure washer for operation, you will need to perform these tasks:

1. Fill out and send in registration card.
2. Attach handle and accessory tray to main unit.
3. Add oil to engine crankcase.
4. Add fuel to fuel tank.
5. Connect high pressure hose to spray gun and pump.
6. Connect water supply to pump.
7. Attach nozzle extension to spray gun.
8. Select/attach quick connect spray tip to nozzle extension.

Attach Handle and Accessory Tray

1. Place handle (**A**) onto handle supports connected to main unit. Make sure holes in handle align with holes on handle supports.

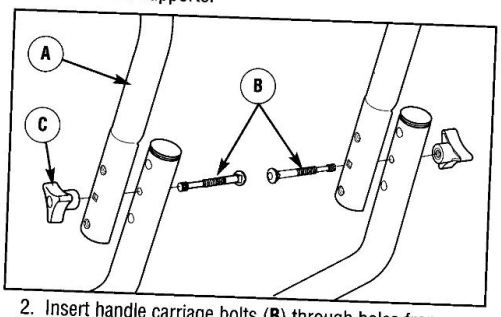

2. Insert handle carriage bolts (**B**) through holes from inside of unit and attach a plastic knob (**C**) from outside of unit. Tighten by hand.

NOTICE By loosening both knobs to the middle section of the attachment bolt, the upper handle can fold forward to store flat atop the cold engine. DO NOT fold the handle down while the engine is hot.

3. Place accessory tray (**D**) over holes (**E**) on handle (viewing from front of unit). Push the tree clips (**F**) into the holes until they sit flat against the accessory tray.

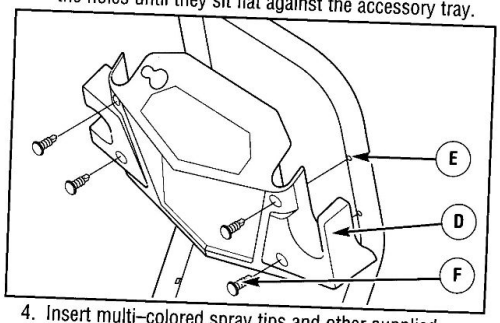

4. Insert multi–colored spray tips and other supplied accessories in spaces provided in accessory tray. See *How to Use Accessory Tray.*

Add Engine Oil

1. Place pressure washer on a flat, level surface.
2. Clean area around oil fill and remove yellow oil fill cap/dipstick.
3. Hold neck of supplied oil pouch and remove cap.
4. Slowly pour contents of oil pouch into oil fill opening. Checking oil level frequently, fill to FULL mark (top hole) on dipstick.

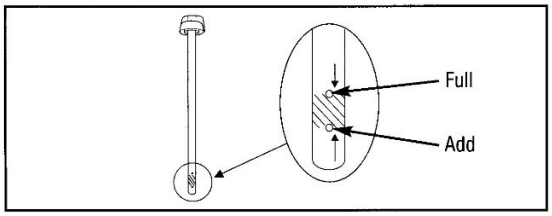

NOTICE Pause to permit oil to settle. Wipe dipstick clean each time oil level is checked. DO NOT overfill.

NOTICE Improper treatment of pressure washer could damage it and shorten its life.

- DO NOT attempt to crank or start the engine before it has been properly serviced with the recommended oil. This could result in an engine failure.

5. Replace oil fill cap/dipstick and fully tighten.

Add Fuel

Fuel must meet these requirements:

- Clean, fresh, unleaded gasoline.
- A minimum of 87 octane/87 AKI (91 RON). For high altitude use, see *High Altitude*.
- Gasoline with up to 10% ethanol (gasohol) is acceptable.

NOTICE Use of unapproved fuels could damage generator and voids warranty.

- DO NOT use unapproved gasoline such as E15 and E85.
- DO NOT mix oil in gasoline or modify engine to run on alternate fuels.

To protect the fuel system from gum formation, mix in a fuel stabilizer when adding fuel. See *Storage*. All fuel is not the same. If you experience starting or performance problems after using fuel, switch to a different fuel provider or change brands. This engine is certified to operate on gasoline. The emission control system for this engine is EM (Engine Modifications).

⚠ WARNING Fuel and its vapors are extremely flammable and explosive which could cause burns, fire or explosion resulting in death or serious injury.

WHEN ADDING FUEL

- Turn pressure washer engine OFF and let it cool at least 2 minutes before removing fuel cap. Loosen cap slowly to relieve pressure in tank.
- Fill fuel tank outdoors.
- DO NOT overfill tank. Allow space for fuel expansion.
- If fuel spills, wait until it evaporates before starting engine.
- Keep fuel away from sparks, open flames, pilot lights, heat, and other ignition sources.
- Check fuel lines, tank, cap and fittings frequently for cracks or leaks. Replace if necessary.
- DO NOT light a cigarette or smoke.

1. Clean area around fuel fill cap, remove cap.
2. Slowly add regular unleaded fuel (**A**) to fuel tank (**B**). Be careful not to overfill. Allow about 1.5" (4 cm) (**C**) of tank space for fuel expansion.

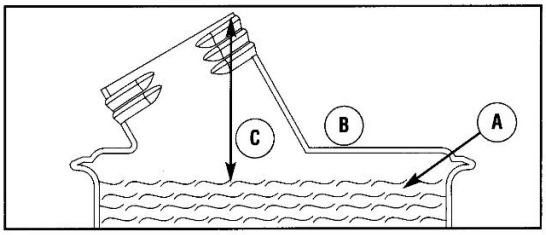

3. Install fuel cap and let any spilled fuel evaporate before starting engine.

High Altitude

At altitudes over 5,000 feet (1524 meters), a minimum 85 octane / 85 AKI (89 RON) gasoline is acceptable. To remain emissions compliant, high altitude adjustment is required. Operation without this adjustment will cause decreased performance, increased fuel consumption, and increased emissions. See an Authorized Briggs & Stratton dealer for high altitude adjustment information. Operation of the engine at altitudes below 2,500 feet (762 meters) with the high altitude kit is not recommended.

Lubricate O-Rings

Lubrication of o-rings is extremely important for installation and operation. The use of a lubricant (petroleum or synthetic grease) during assembly helps seat o-rings properly and provides an improved seal. It also helps protect the o-ring from damage by abrasion, pinching or cutting and extends the life of the o-ring.

NOTICE ALWAYS apply a small amount of lubricant on o-rings prior to assembling the garden hose to the pump (**A**), high pressure hose (**B**), spray gun (**C**), and nozzle extension (**D**).

Lubricate all connections shown below, following these instructions:

1. Inspect and clean connecting surfaces prior to lubrication and assembly.
2. Use lubricants sparingly during assembly; a light film is all that is required.
3. Use a small brush or cotton swab to apply grease directly to o-rings where they are not accessible (QC fitting, M22 fitting).

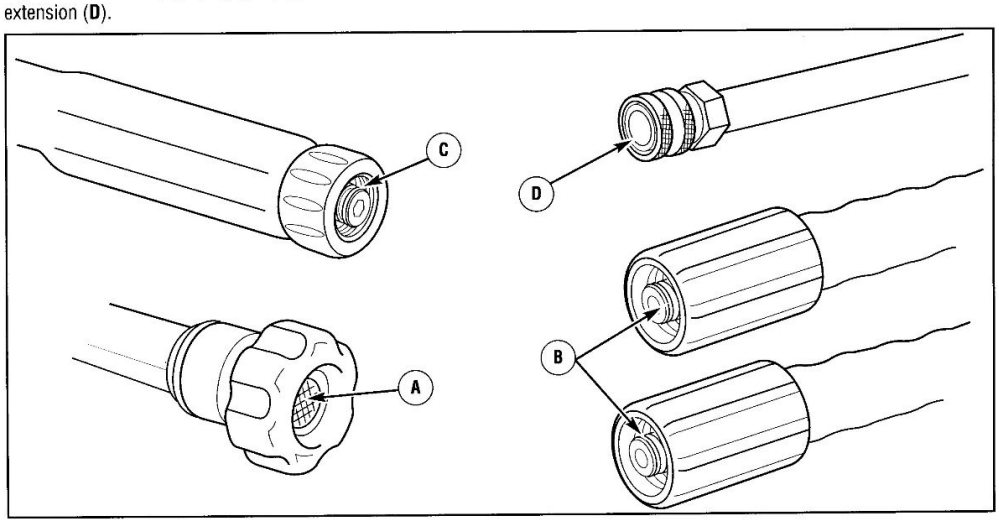

Connect Hose and Water Supply to Pump

NOTICE DO NOT run the pump without the water supply connected and turned on.

- Damage to equipment resulting from failure to follow this instruction will void warranty.

NOTICE Remove and discard the shipping caps from the pump's high pressure outlet and water inlet before attaching hoses.

1. Uncoil high pressure hose and attach one end of hose to base of spray gun. Tighten by hand.

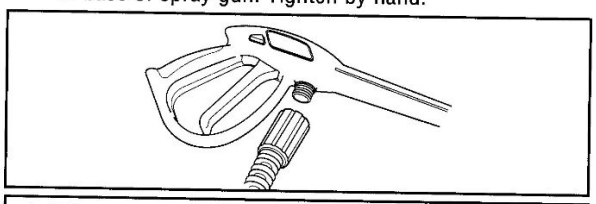

⚠ WARNING The high pressure stream of water that this equipment produces could cut through skin and its underlying tissues, resulting in serious injury and possible amputation.

- NEVER connect high pressure hose to nozzle extension.
- Keep high pressure hose connected to pump and spray gun while system is pressurized.
- Always be certain spray gun, nozzles and accessories are correctly attached.

2. Attach other end of high pressure hose to high pressure outlet on pump. Tighten by hand.

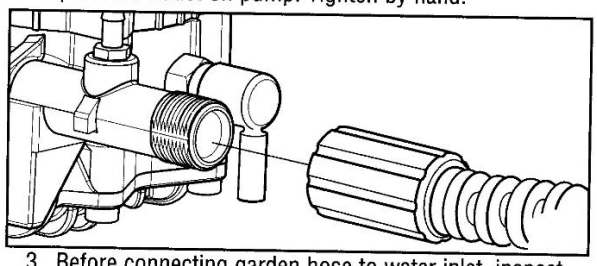

3. Before connecting garden hose to water inlet, inspect inlet screen (**A**). Clean screen if it contains debris or have it replaced if damaged. DO NOT run pressure washer if inlet screen is damaged.

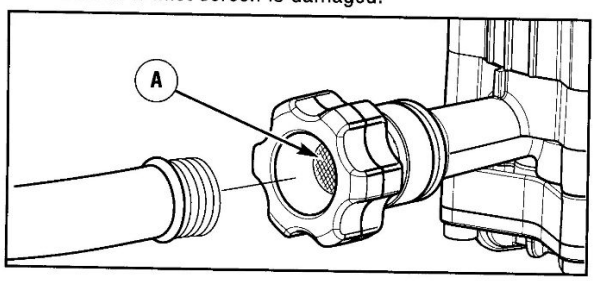

4. Run water through your garden hose for 30 seconds to clean out any debris.

NOTICE DO NOT siphon standing water for the water supply. Use ONLY cold water (less than 100°F (38°C)).

NOTICE Using a One Way Valve (vacuum breaker or check valve) at pump inlet could cause pump or inlet connector damage.

- There MUST be at least ten feet of unrestricted garden hose between the pressure washer inlet and any device, such as a vacuum breaker or check valve.
- Damage to equipment resulting from failure to follow this instruction will void warranty.

5. Connect the garden hose (not to exceed 50 feet (15 m) in length) to the water inlet. Tighten by hand.

⚠ WARNING Risk of eye injury. Spray could splash back or propel objects resulting in serious injury.

- Always wear indirect vented (chemical splash) safety goggles marked to comply with ANSI Z87.1 when using or in vicinity of this equipment.
- NEVER substitute safety glasses or dry-condition goggles for indirect vented safety goggles.

6. Turn ON the water, press red button (**B**) on the gun and squeeze the trigger to purge the pump system of air and impurities.

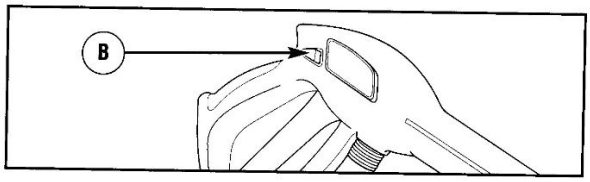

Checklist Before Starting Engine

Review the unit's assembly to ensure you have performed all of the following.

1. Be sure to read the *Operator Safety* section and *How to Use Your Pressure Washer* in *Operation* section before using pressure washer.
2. Make sure handle is in place and secure.
3. Check that oil has been added to proper level in the engine crankcase.
4. Add proper fuel to fuel tank.
5. Check for properly tightened hose connections.
6. Check to make sure there are no kinks, cuts, or damage to high pressure hose.
7. Provide a proper water supply at an adequate flow.

Features and Controls

Read this Operator's Manual and safety rules before operating your pressure washer.

Compare the illustrations with your pressure washer, to familiarize yourself with the locations of various controls and adjustments. Save this manual for future reference.

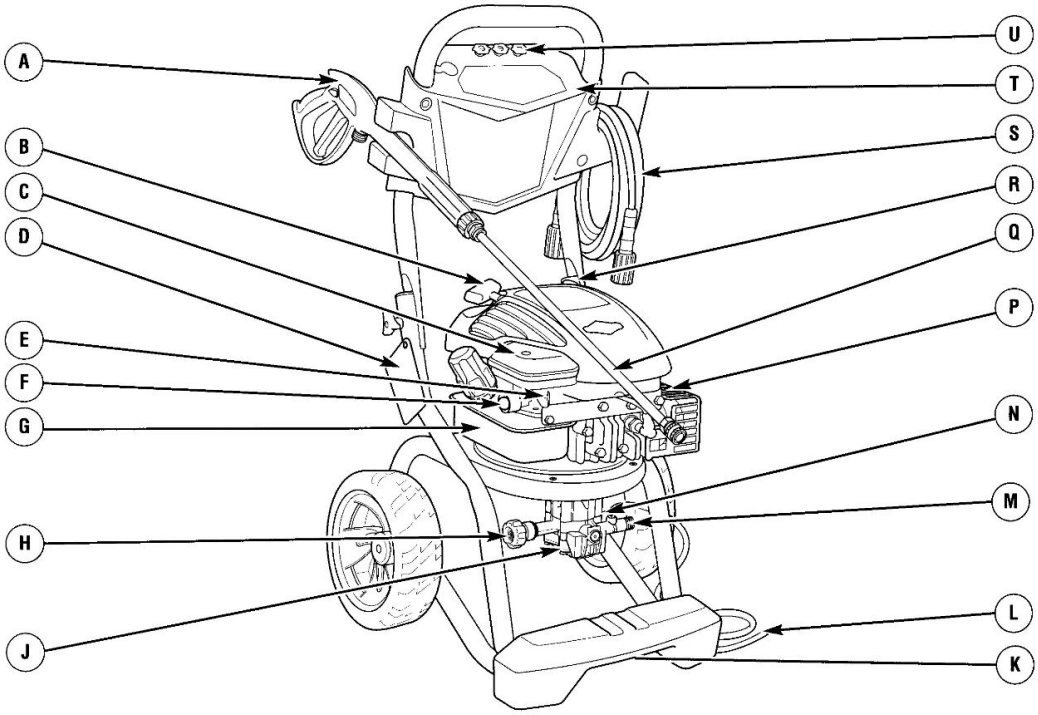

A - Spray Gun — Controls the application of water onto cleaning surface with trigger device. Includes trigger lock.

B - Recoil Starter — Used for starting the engine manually.

C - Air Filter — Protects engine by filtering dust and debris out of intake air.

D - Warning/Operating Instructions Tag — Identifies hazards and proper procedure to start/stop pressure washer.

E - Throttle Lever — Sets engine in starting mode for recoil starter and stops a running engine.

F - Primer Bulb — Prepares a cold engine for starting.

G - Fuel Tank — Fill tank with regular unleaded fuel. Always leave room for fuel expansion.

H - Water Inlet — Connection for garden hose.

J - Pump — Develops high pressure.

K - Identification Label (under foot) — Provides model and serial number of pressure washer. Please have these readily available if calling for assistance.

L - Detergent Siphoning Tube — Use to siphon pressure washer safe detergents into the low pressure stream.

M - High Pressure Outlet — Connection for high pressure hose.

N - Automatic Cool Down System — Cycles water through pump when water reaches 125°-155°F (51°C-68°C). Warm water will discharge from pump onto ground. This system prevents internal pump damage.

P - Engine Identification — Provides model, type and code of engine. Please have these readily available if calling for assistance.

Q - Nozzle Extension with Quick Connect — Allows you to switch between three different spray tips.

R - Oil Fill/Dipstick — Check and fill with oil here.

S - High Pressure Hose — Connect one end to water pump and the other end to spray gun.

T - Accessory Tray — Provides convenient storage for standard and optional accessories, such as brushes, turbo wands, etc.

U - Spray Tips — Detergent, 0°, and 25°: for various high pressure cleaning applications.

Operation

If you have any problems operating your pressure washer, please call the pressure washer helpline at **(888) 611-6708**.

Pressure Washer Location

Carbon Monoxide Poisoning

▲ WARNING POISONOUS GAS HAZARD. Engine exhaust contains carbon monoxide, a poisonous gas that could kill you in minutes. You CANNOT smell it, see it, or taste it. Even if you do not smell exhaust fumes, you could still be exposed to carbon monoxide gas.

- Operate this product ONLY outside far away from windows, doors and vents to reduce the risk of carbon monoxide gas from accumulating and potentially being drawn towards occupied spaces.
- Install battery-operated carbon monoxide alarms or plug-in carbon monoxide alarms with battery back-up according to the manufacturer's instructions. Smoke alarms cannot detect carbon monoxide gas.
- DO NOT run this product inside homes, garages, basements, crawlspaces, sheds, or other partially-enclosed spaces even if using fans or opening doors and windows for ventilation. Carbon monoxide can quickly build up in these spaces and can linger for hours, even after this product has shut off.
- ALWAYS place this product downwind and point the engine exhaust away from occupied spaces.

If you start to feel sick, dizzy, or weak while using this product, shut it off and get to fresh air RIGHT AWAY. See a doctor. You may have carbon monoxide poisoning.

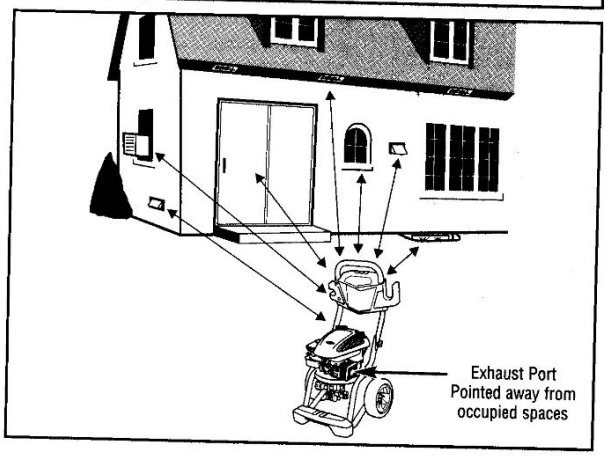

Risk of Fire Clearances

▲ WARNING Exhaust heat/gases could ignite combustibles, structures or damage fuel tank causing a fire, resulting in death or serious injury.

- Keep at least 5 ft. (1.5 m) clearance on all sides of pressure washer including overhead.

How to Start Your Pressure Washer

To start your pressure washer for the first time, follow thes instructions step-by-step. This starting information also applies if you have let the pressure washer sit idle for at lea a day.

1. Place pressure washer near an outside water source capable of supplying water at a flow rate greater than 2.8 gallons per minute (10.6 liters per minute) and no less than 20 PSI (1.38 BARS) at pressure washer end of garden hose. DO NOT siphon supply water.
2. Check that high pressure hose is tightly connected to spray gun and pump. See *Assembly* section.
3. Make sure unit is in a level position.
4. Connect garden hose to water inlet on pressure washei pump.

NOTICE DO NOT run the pump without the water supply connected and turned on.

- Damage to equipment resulting from failure to follow this instruction will void warranty.

5. Turn ON water, point spray gun in a safe direction, press red button and squeeze trigger to purge pump system of air and impurities.
6. Attach nozzle extension to spray gun. Tighten by hand.

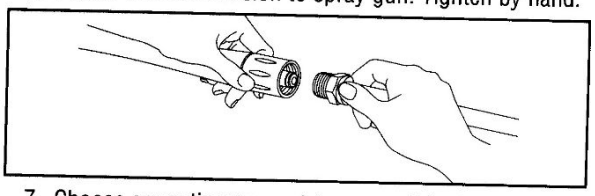

7. Choose spray tip you want to use, pull back on collar of nozzle extension, insert spray tip and release collar. Tug on spray tip to make sure it is securely in place. See *How to Use Spray Tips.*

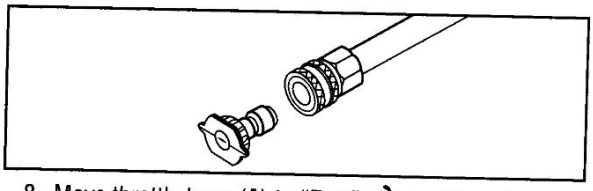

8. Move throttle lever (**A**) to "**Fast**" position, shown as a rabbit.

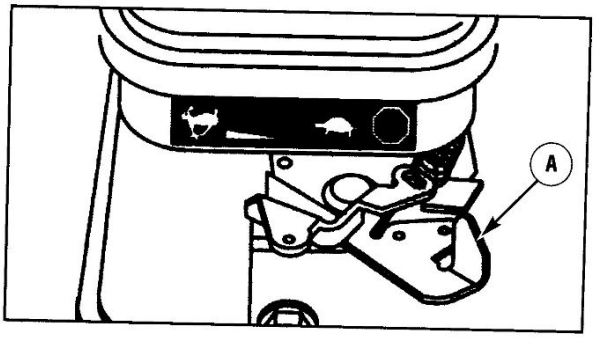

To start the engine for the very first time:

9A. Push primer bulb firmly 5 times, waiting 2 seconds between each push.

To start engine thereafter:

9B. Press primer bulb firmly 3 times, waiting 2 seconds between each push. For a warm engine, DO NOT press primer bulb.

NOTICE Before starting the pressure washer, be sure you are wearing safety goggles as described below.

▲ WARNING Risk of eye injury.
Spray could splash back or propel objects resulting in serious injury.

- Always wear indirect vented (chemical splash) safety goggles marked to comply with ANSI Z87.1 when using or in vicinity of this equipment.
- NEVER substitute safety glasses or dry-condition goggles for indirect vented safety goggles.

10. When starting engine, position yourself as recommended and grasp starter grip handle and pull slowly until you feel some resistance. Then pull rapidly to start engine.

▲ WARNING Starter cord kickback (rapid retraction) will pull hand and arm toward engine faster than you can let go which could cause broken bones, fractures, bruises, or sprains resulting in serious injury.

- NEVER pull starter cord without first relieving spray gun pressure.
- When starting engine, pull cord slowly until resistance is felt and then pull rapidly to avoid kickback.
- After each starting attempt, where engine fails to run, always point spray gun in safe direction, press red button and squeeze spray gun trigger to release high pressure.
- Firmly grasp spray gun with both hands when using high pressure spray to avoid injury when spray gun kicks back.

11. Return starter grip handle slowly. DO NOT let rope "snap back" against starter.

NOTICE Always keep the throttle lever in the "**Fast**" position when operating the pressure washer.

▲ WARNING The high pressure stream of water that this equipment produces could cut through skin and its underlying tissues, resulting in serious injury and possible amputation.
Spray gun traps high water pressure, even when engine is stopped and water is disconnected, which could result in serious injury.

- DO NOT allow CHILDREN to operate pressure washer.
- Keep high pressure hose connected to pump and spray gun while system is pressurized.
- NEVER aim spray gun at people, animals, or plants.
- DO NOT secure spray gun in open position.
- DO NOT leave spray gun unattended while machine is running.
- NEVER use a spray gun which does not have a trigger lock or trigger guard in place and in working order.
- Always be certain spray gun, nozzles and accessories are correctly attached.

▲ WARNING Exhaust heat/gases could ignite combustibles, structures or damage fuel tank causing a fire, resulting in death or serious injury.
Contact with muffler area could cause burns resulting in serious injury.

- DO NOT touch hot parts and AVOID hot exhaust gases.
- Allow equipment to cool before touching.
- Keep at least 5 feet (1.5 m) of clearance on all sides of pressure washer including overhead.
- It is a violation of California Public Resource Code, Section 4442, to use or operate the engine on any forest-covered, brush-covered, or grass-covered land unless the exhaust system is equipped with a spark arrester, as defined in Section 4442, maintained in effective working order. Other states or federal jurisdictions may have similar laws.

  Contact the original equipment manufacturer, retailer, or dealer to obtain a spark arrester designed for the exhaust system installed on this engine.
- Replacement parts must be the same and installed in the same position as the original parts.

How to Stop Your Pressure Washer

1. Release spray gun trigger and let engine idle for two minutes.
2. Move throttle to SLOW position, then STOP position.
3. ALWAYS point gun in a safe direction and press red button and squeeze spray gun trigger to release retained high water pressure.

⚠ WARNING The high pressure stream of water that this equipment produces could cut through skin and its underlying tissues, resulting in serious injury and possible amputation.

Spray gun traps high water pressure, even when engine is stopped and water is disconnected, which could result in serious injury.

- Keep high pressure hose connected to pump and spray gun while system is pressurized.
- ALWAYS point spray gun in safe direction, press red button and squeeze spray gun trigger to release high pressure, every time you stop engine.

How to Use Accessory Tray

The unit is equipped with an accessory tray with places to store your spray gun, nozzle extension, high pressure hose and quick connect spray tips.

1. Place spray gun through notches on left side of accessory tray as shown.

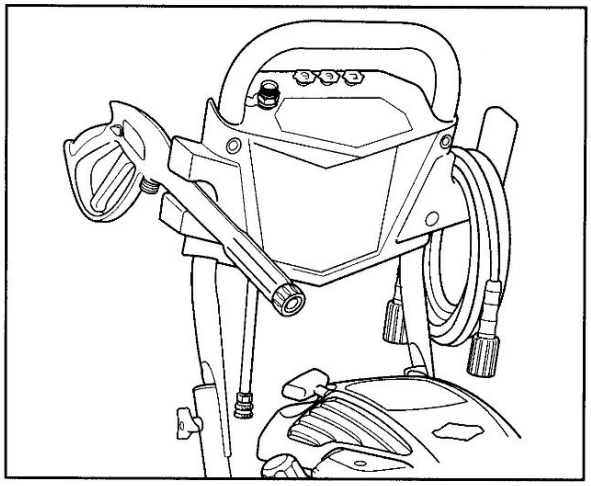

2. Place nozzle extension in hole on left side of accessory tray as shown.
3. Insert multi–colored spray tips in spaces provided in accessory tray.
4. Hang high pressure hose on hook attached to the right side of the accessory tray as shown.

How to Use Spray Tips

The quick–connect on the nozzle extension allows you to switch between three different quick connect spray tips. Spray tips can be changed while pressure washer is running once spray gun trigger lock is engaged. The spray tips vary the spray pattern as shown.

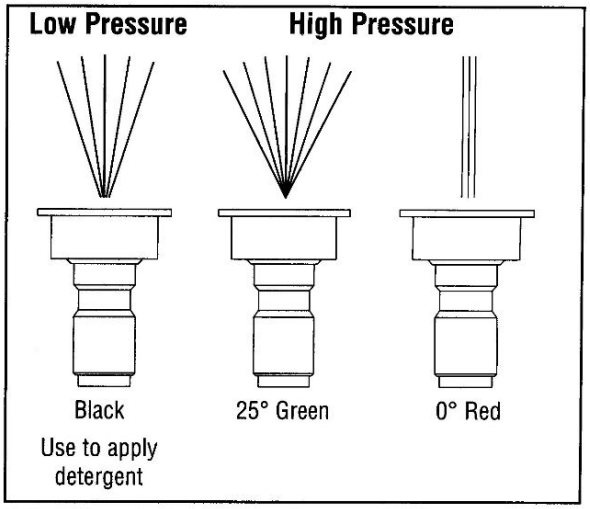

Follow these instructions to change spray tips:

1. Pull back collar on quick–connect and pull current spray tip off. Store spray tips in holder provided on the accessory tray.

⚠ WARNING The high pressure stream of water that this equipment produces could cut through skin and its underlying tissues, resulting in serious injury and possible amputation.

- NEVER exchange spray tips without the trigger lock being engaged on the spray gun.
- DO NOT twist spray tips while spraying.

2. Select desired spray tip:
   - For gentle rinse, select green 25° spray tip.
   - To scour surface, select red 0° spray tip.
   - To apply detergent, select black spray tip.
3. Pull back on collar, insert new spray tip and release collar. Tug on spray tip to make sure it is securely in place.

Usage Tips

- For most effective cleaning, keep spray tip from 8 to 24 inches (20 to 61 cm) away from cleaning surface.
- If you get spray tip too close, especially using a high pressure spray tip, you may damage surface being cleaned.
- DO NOT get closer than 6 inches (15 cm) when cleaning tires.

Cleaning and Applying Detergent

▲ WARNING Chemical Burn Hazard.
Chemicals could cause burns resulting in death or serious injury.

- DO NOT use caustic liquid with pressure washer.
- Use ONLY pressure washer safe detergents/soaps. Follow all manufacturers instructions.

To apply detergent, follow these steps:

1. Review use of spray tips.
2. Prepare detergent solution as required by job.
3. Place end of detergent siphoning tube into detergent container.

NOTICE Contact with hot muffler could damage detergent siphoning tube.

- When inserting tube into a detergent solution bottle, route tube so as to keep it from inadvertently contacting the hot muffler.

NOTICE Make sure the end of the tube is fully submerged in detergent while applying detergent.

4. Make sure black spray tip is installed.

NOTICE Detergent cannot be applied with the high pressure spray tips (Green or Red).

5. Make sure garden hose is connected to water inlet. Check that high pressure hose is connected to spray gun and pump. Turn on water.

NOTICE You must attach all hoses before you start the engine.

- Starting the engine without all the hoses connected and without the water turned ON could damage the pump.
- Damage to equipment resulting from failure to follow this instruction will void warranty.

6. Start engine following instructions *How to Start Your Pressure Washer.*
7. Apply detergent to a dry surface, starting at lower portion of area to be washed and work upward, using long, even, overlapping strokes.
8. Allow detergent to "soak in" for 3-5 minutes before washing and rinsing. Reapply as needed to prevent surface from drying. DO NOT allow detergent to dry on (prevents streaking).

NOTICE You must flush the detergent siphoning system after each use by placing tube into a bucket of clean water, then run the pressure washer in low pressure for 1-2 minutes.

Pressure Washer Rinsing

For Rinsing:

1. Remove black spray tip from nozzle extension.
2. Select and install desired high pressure spray tip following instructions *How to Use Spray Tips.*
3. Keep spray gun a safe distance from area you plan to spray.

▲ WARNING Kickback from spray gun could cause you to fall resulting in death or serious injury.

- Operate pressure washer from a stable surface.
- Be extremely careful if you must use the pressure washer from a ladder, scaffolding, or any other similar location.
- Firmly grasp spray gun with both hands when using high pressure spray to avoid injury when spray gun kicks back.

4. Apply a high pressure spray to a small area and then check surface for damage. If no damage is found, you can assume it is okay to continue rinsing.
5. Start at top of area to be rinsed, working down with same overlapping strokes as you used for cleaning.

Cleaning Detergent Siphoning Tube

If you used the detergent siphoning tube, you must flush it with clean water before stopping the engine.

1. Place detergent siphoning tube in a bucket full of clean water.
2. Remove high pressure spray tip from nozzle extension.
3. Select and install black detergent spray tip following instructions *How to Use Spray Tips.*
4. Flush for 1-2 minutes.
5. Shut off engine following instructions *How to Stop Pressure Washer* and turn off water supply.
6. ALWAYS point spray gun in a safe direction and squeeze spray gun trigger to release retained high water pressure.

▲ WARNING The high pressure stream of water that this equipment produces could cut through skin and its underlying tissues, resulting in serious injury and possible amputation.
Spray gun traps high water pressure, even when engine is stopped and water is disconnected, which could result in serious injury.

- Keep high pressure hose connected to pump and spray gun while system is pressurized.
- ALWAYS point spray gun in safe direction, press red button and squeeze spray gun trigger to release high pressure, every time you stop engine.

Automatic Cool Down System (Thermal Relief)

If you run the engine on your pressure washer for 3-5 minutes without pressing the trigger on the spray gun, circulating water in the pump can reach temperatures above 125°F (51°C). The system engages to cool the pump by **discharging the warm water onto the ground.**

Maintenance

Maintenance Schedule

Follow the hourly or calendar intervals, whichever occurs first. More frequent service is required when operating in adverse conditions noted below.

First 5 Hours
• Change engine oil
Every 8 Hours or Daily
• Check/clean water inlet screen[1]
• Check high pressure hose
• Check detergent siphoning tube
• Check spray gun and assembly for leaks
• Clean debris
• Check engine oil level
Every 25 Hours or Yearly
• Service engine air cleaner[2]
Every 50 Hours or Yearly
• Change engine oil[2]
• Inspect muffler and spark arrester
Every 100 Hours or Yearly
• Service spark plug
• Clean cooling system[2]

[1] Clean if clogged. Replace if perforated or torn.
[2] Service more often under dirty or dusty conditions.

General Recommendations

Regular maintenance will improve the performance and extend the life of the pressure washer. See any qualified dealer for service.

The pressure washer's warranty does not cover items that have been subjected to operator abuse or negligence. To receive full value from the warranty, the operator must maintain the pressure washer as instructed in this manual, including proper storage as detailed in *Winter Storage* and *Long Term Storage.*

NOTICE Should you have questions about replacing components on your pressure washer, please call **(888) 611-6708** for assistance.

Some adjustments will need to be made periodically to properly maintain your pressure washer.

All service and adjustments should be made at least once each season. Follow the requirements in the Maintenance Schedule chart above.

NOTICE Once a year you should clean or replace the spark plug, clean or replace the air filter, and check the spray gun and nozzle extension assembly for wear. A new spark plug and clean air filter assure proper fuel-air mixture and help your engine run better and last longer.

Pump Oil

DO NOT attempt any oil maintenance on this pump. The pump is pre-lubricated and sealed from the factory, requiring no additional maintenance for the life of the pump.

Emissions Control

Maintenance, replacement, or repair of the emissions control devices and systems may be performed by any non-road engine repair establishment or individual. However, to obtain "no charge" emissions control service, the work must be performed by a factory authorized dealer. See the *Emissions Warranty.*

Before Each Use

1. Check engine oil level.
2. Clean debris.
3. Check water inlet screen for damage.
4. Check high pressure hose for leaks.
5. Check detergent siphoning tube for damage.
6. Check spray gun and nozzle extension assembly for leaks.
7. Rinse out garden hose to flush out debris.

Pressure Washer Maintenance

Clean Debris

Daily or before use, clean accumulated debris from cleaning system. Keep linkage, spring and controls clean. Keep area around and behind muffler free from any combustible debris. Inspect cooling air slots and openings on the pressure washer. These openings must be kept clean and unobstructed.

Pressure washer parts should be kept clean to reduce the risk of overheating and ignition of accumulated debris.

- Use a damp cloth to wipe exterior surfaces clean.

NOTICE Improper treatment of pressure washer could damage it and shorten its life.

- DO NOT insert any objects through cooling slots.

- Use a soft bristle brush to loosen caked on dirt, oil, etc.
- Use a vacuum cleaner to pick up loose dirt and debris.

Check and Clean Inlet Screen

Examine the screen on the pump's water inlet. Clean it if the screen is clogged or replace it if screen is damaged.

Check High Pressure Hose

The high pressure hose can develop leaks from wear, kinking, or abuse. Inspect the hose each time before using it. Check for cuts, leaks, abrasions or bulging of cover, damage or movement of couplings. If any of these conditions exist, replace the hose immediately.

▲ WARNING The high pressure stream of water that this equipment produces could cut through skin and its underlying tissues, resulting in serious injury and possible amputation.

- NEVER repair high pressure hose. Replace it.
- Replacement hose rating MUST equal or exceed maximum pressure rating of unit.

Check Detergent Siphoning Tube

Examine detergent tube and clean if clogged. The tube should fit tightly on the barbed fitting. Examine the tube for leaks or tears. Replace the tube if damaged.

Detergent Siphoning Check Ball

Occasionally check ball in detergent siphoning system may become stuck from storage, dried soap, or minerals in water. The check ball can be freed by performing the following:

NOTICE Before performing this procedure, be sure you are wearing safety goggles as described below.

▲ WARNING Risk of eye injury. Spray could splash back or propel objects resulting in serious injury.

- Always wear indirect vented (chemical splash) safety goggles marked to comply with ANSI Z87.1 when using or in vicinity of this equipment.
- NEVER substitute safety glasses or dry-condition goggles for indirect vented safety goggles.

1. Shut off engine and turn off water supply.
2. ALWAYS point spray gun in a safe direction, press red button and squeeze spray gun trigger to release retained high water pressure.

▲ WARNING The high pressure stream of water that this equipment produces could cut through skin and its underlying tissues, resulting in serious injury and possible amputation.

Spray gun traps high water pressure, even when engine is stopped and water is disconnected, which could result in serious injury.

- Keep high pressure hose connected to pump and spray gun while system is pressurized.
- ALWAYS point spray gun in safe direction, press red button and squeeze spray gun trigger to release high pressure, every time you stop engine.

3. Remove detergent siphoning hose from barbed fitting on pump.
4. Using a firm, blunt object 7/64" in diameter or smaller, by at least 1" long, such as an Allen wrench, slowly insert the object into the barbed fitting until you meet resistance. This resistance is the check ball.
5. Slowly push down until you feel the ball move slightly, push no more than 1/8". Slight pressure may be required to free the ball.
6. Repeat steps 4 and 5 if necessary.
7. Reinstall detergent siphoning hose onto barb fitting.
8. Treat with PumpSaver as described in *Protecting the Pump* during storage to prevent reoccurrence.

Check Spray Gun

Examine the hose connection to the spray gun and make sure it is secure. Test the trigger by pressing the red button and making sure the trigger "springs back" into place when you release it. You should not be able to press the trigger without pressing the red button. Replace spray gun immediately if it fails any of these tests.

Nozzle Maintenance

A pulsing sensation felt while squeezing the spray gun trigger may be caused by excessive pump pressure. The principal cause of excessive pump pressure is a spray tip clogged or restricted with foreign materials, such as dirt, etc. To correct the problem, immediately clean the spray tip following these instructions:

1. Shut off engine and turn off water supply.
2. ALWAYS point spray gun in a safe direction, press red button and squeeze spray gun trigger to release retained high water pressure.

▲ WARNING The high pressure stream of water that this equipment produces could cut through skin and its underlying tissues, resulting in serious injury and possible amputation.

Spray gun traps high water pressure, even when engine is stopped and water is disconnected, which could result in serious injury.

- Keep high pressure hose connected to pump and spray gun while system is pressurized.
- ALWAYS point spray gun in safe direction, press red button and squeeze spray gun trigger to release high pressure, every time you stop engine.

3. Remove spray tip from end of nozzle extension.
4. Use a small paper clip to free any foreign material clogging or restricting spray tip (**A**).

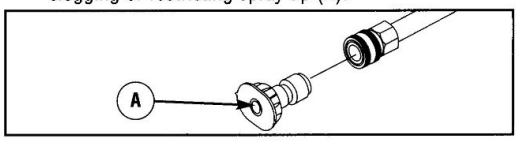

5. Remove nozzle extension from spray gun.
6. Using a garden hose, remove additional debris by back flushing water through nozzle extension. Back flush between 30 to 60 seconds.

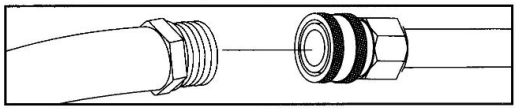

7. Reinstall spray tip into nozzle extension.
8. Reconnect nozzle extension to spray gun.
9. Make sure garden hose is connected to water inlet. Check that high pressure hose is connected to spray gun and pump. Turn on water.
10. Start engine following instructions *How to Start Your Pressure Washer.*
11. Test pressure washer by operating with each quick connect spray tip.

O-Ring Maintenance

Purchase an O-Ring/Maintenance Kit, part number 196002GS by contacting the nearest authorized service center. It is not included with the pressure washer. This kit includes replacement o-rings, rubber washer and water inlet filter. Refer to the instruction sheet provided in the kit to service your unit's o-rings.

▲ WARNING The high pressure stream of water that this equipment produces could cut through skin and its underlying tissues, resulting in serious injury and possible amputation.

- NEVER repair leaking connections with sealant of any kind. Replace o-ring or seal.

Engine Maintenance

▲ WARNING Unintentional sparking could cause fire or electric shock resulting in death or serious injury.

WHEN ADJUSTING OR MAKING REPAIRS TO YOUR PRESSURE WASHER

- Disconnect the spark plug wire from the spark plug and place the wire where it cannot contact spark plug.

WHEN TESTING FOR ENGINE SPARK

- Use approved spark plug tester.
- DO NOT check for spark with spark plug removed.

Oil

Oil Recommendations

We recommend the use of Briggs & Stratton Warranty Certified oils for best performance. Other high-quality detergent oils are acceptable if classified for service SF, SG, SH, SJ or higher. DO NOT use special additives.

Outdoor temperatures determine the proper oil viscosity for the engine. Use the chart to select the best viscosity for the outdoor temperature range expected.

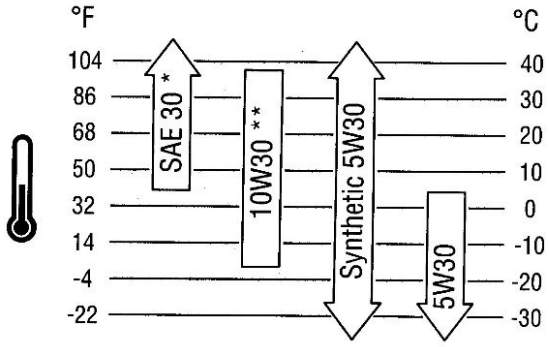

* Below 40°F (4°C) the use of SAE 30 will result in hard starting.

** Above 80°F (27°C) the use of 10W30 may cause increased oil consumption. Check oil level more frequently.

Checking Oil Level

Oil level should be checked prior to each use or at least every 8 hours of operation. Keep oil level maintained.

1. Make sure pressure washer is on a level surface.
2. Remove oil dipstick and wipe dipstick with clean cloth Replace and tighten dipstick. Remove and check oil level.
3. Verify oil is at FULL mark (top hole) on dipstick. Replace and tighten dipstick.

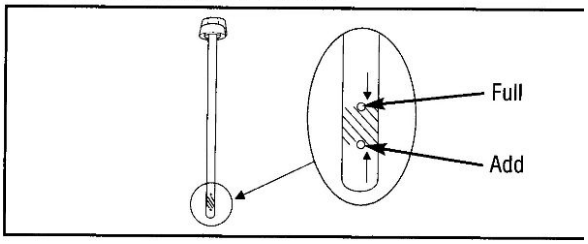

Adding Engine Oil

1. Make sure pressure washer is on a level surface.
2. Check oil level as described in *Checking Oil Level.*
3. If needed, slowly pour oil into oil fill opening to the FULL mark on dipstick. DO NOT overfill.

NOTICE Overfilling with oil may cause the engine to not start, or hard starting.

- DO NOT overfill.
- If over the FULL mark on dipstick, drain oil to reduce oil level to FULL mark on dipstick.

4. Replace and tighten dipstick.

Changing Engine Oil

If you are using your pressure washer under extremely dirty or dusty conditions, or in extremely hot weather, change the oil more often.

> ⚠ **CAUTION** Avoid prolonged or repeated skin contact with used motor oil.
> - Used motor oil has been shown to cause skin cancer in certain laboratory animals.
> - Thoroughly wash exposed areas with soap and water.

KEEP OUT OF REACH OF CHILDREN. DON'T POLLUTE. CONSERVE RESOURCES. RETURN USED OIL TO COLLECTION CENTERS.

Change oil while engine is still warm from running, as follows:

1. Drain fuel tank by running pressure washer until fuel tank is empty.
2. Disconnect spark plug wire and keep it away from spark plug.
3. Clean area around oil fill, remove oil fill cap/dipstick. Wipe dipstick clean.
4. Tip your pressure washer to drain oil from oil fill into a suitable container making sure you tip your unit away from spark plug. When crankcase is empty, return pressure washer to upright position.
5. Slowly pour recommended oil (about 18 oz. (0.53 l)) into oil fill opening. Pause to permit oil to settle. Fill to Full mark (top hole) on dipstick.
6. Wipe dipstick clean each time oil level is checked. DO NOT overfill.
7. Replace and tighten dipstick.
8. Wipe up any remaining oil.
9. Reconnect spark plug wire to spark plug.

Service Air Cleaner

Your engine will not run properly and may be damaged if you run it with a dirty air cleaner. Service more often if operating under dirty or dusty conditions.

To service the air cleaner, follow these steps:

1. Remove screw (**A**).

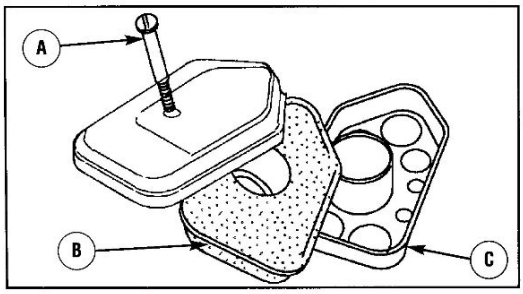

2. Carefully remove air cleaner assembly to prevent debris from falling into carburetor.
3. Take air cleaner assembly apart and clean all parts. Wash foam air cleaner (**B**) in liquid detergent and water. Squeeze dry in a clean cloth.
4. SATURATE foam air cleaner in engine oil and squeeze in a clean cloth to remove excess oil.
5. Reinstall clean or new foam air cleaner in base (**C**).
6. Install air cleaner securely on carburetor with screw.

Service Spark Plug

Changing the spark plug will help your engine to start easier and run better.

1. Clean area around spark plug.
2. Remove and inspect spark plug.
3. Replace spark plug if electrodes are pitted, burned or porcelain is cracked. Use the recommended replacement plug. See *Specifications*.
4. Check electrode gap with wire feeler gauge and reset spark plug gap to recommended gap if necessary (see *Specifications*).

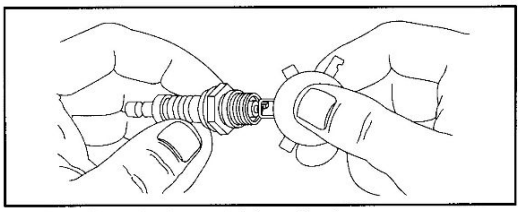

5. Install spark plug and tighten firmly.

Inspect Muffler and Spark Arrester

Inspect the muffler for cracks, corrosion, or other damage. Remove the spark arrester, if equipped, and inspect for damage or carbon blockage. If replacement parts are required, make sure to use only original equipment replacement parts.

> ⚠ **WARNING** Exhaust heat/gases could ignite combustibles, structures or damage fuel tank causing a fire, resulting in death or serious injury.
>
> Contact with muffler area could cause burns resulting in serious injury.
> - DO NOT touch hot parts and AVOID hot exhaust gases.
> - Allow equipment to cool before touching.
> - Keep at least 5 feet (1.5 m) of clearance on all sides of pressure washer including overhead.
> - It is a violation of California Public Resource Code, Section 4442, to use or operate the engine on any forest-covered, brush-covered, or grass-covered land unless the exhaust system is equipped with a spark arrester, as defined in Section 4442, maintained in effective working order. Other states or federal jurisdictions may have similar laws.
>
> Contact the original equipment manufacturer, retailer, or dealer to obtain a spark arrester designed for the exhaust system installed on this engine.
> - Replacement parts must be the same and installed in the same position as the original parts.

Air Cooling System

Over time debris may accumulate in cylinder cooling fins and cannot be observed without partial engine disassembly. For this reason, we recommend you have a qualified service dealer clean the cooling system per recommended intervals (see *Maintenance Schedule* in beginning of *Maintenance* section). Equally important is to keep top of engine free from debris. See *Clean Debris.*

Keep areas within heavy line clear of debris.

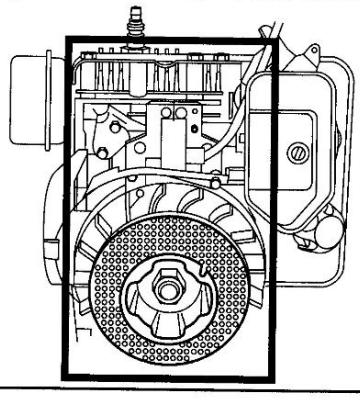

Carburetor Adjustment

The carburetor on this engine is low emission. It is equipped with a non-adjustable idle mixture valve. Top speed has been set at the factory. If adjustment is required, see an authorized service dealer.

▲ CAUTION Excessively high operating speeds could result in minor injury.
Excessively low speeds impose a heavy load.

- DO NOT tamper with governor spring, links or other parts to increase engine speed. Pressure washer supplies correct rated pressure and flow when running at governed speed.
- DO NOT modify pressure washer in any way.

After Each Use

Water should not remain in the unit for long periods of time. Sediments or minerals can deposit on pump parts and freeze pump action. Follow these procedures after every use:

1. Shut off engine, turn off water supply, point gun in a safe direction, press red button and squeeze trigger to relieve trapped pressure, and let engine cool.

▲ WARNING The high pressure stream of water that this equipment produces could cut through skin and its underlying tissues, resulting in serious injury and possible amputation.
Spray gun traps high water pressure, even when engine is stopped and water is disconnected, which could result in serious injury.

- Keep high pressure hose connected to pump and spray gun while system is pressurized.
- ALWAYS point spray gun in safe direction, press red button and squeeze spray gun trigger to release high pressure, every time you stop engine.

2. Disconnect hose from spray gun and high pressure outlet on pump. Drain water from hose, spray gun, and nozzle extension. Use a rag to wipe off the hose.
3. Place the spray gun and nozzle extension in the accessory tray. Hang high pressure hose on hook attached to accessory tray.
4. Empty pump of all pumped liquids by pulling recoil handle about six times. This should remove most liquid in pump.
5. Store unit in a clean, dry area.
6. If storing for more than 30 days, see *Long Term Storage* on next page.

▲ WARNING Fuel and its vapors are extremely flammable and explosive which could cause burns, fire or explosion resulting in death or serious injury.

WHEN STORING FUEL OR EQUIPMENT WITH FUEL IN TANK

- Store away from furnaces, stoves, water heaters, clothes dryers, or other appliances that have pilot light or other ignition source because they could ignite fuel vapors.

Winter Storage

NOTICE You must protect your unit from freezing temperatures.

- Failure to do so will permanently damage your pump and render your unit inoperable.
- Freeze damage is not covered under warranty.

To protect the unit from freezing temperatures:

1. Follow steps 1-4 in the previous section *After Each Use.*
2. Use pump saver, Model 6039, to treat pump. This minimizes freeze damage and lubricates pistons and seals.
3. If pump saver is not available, connect a 3-foot (1 m) section of garden hose to water inlet adapter. Pour RV-antifreeze (antifreeze without alcohol) into hose. Pull recoil handle twice. Disconnect 3-foot (1 m) hose.
4. Store unit in a clean, dry area.

Long Term Storage

If you do not plan to use the pressure washer for more than 30 days, you must prepare the engine and pump for long term storage.

Protect Fuel System

Fuel Additive:

Fuel can become stale when stored over 30 days. Stale fuel causes acid and gum deposits to form in the fuel system or on essential carburetor parts. To keep fuel fresh, use **Briggs & Stratton® Advanced Formula Fuel Treatment & Stabilizer**, available wherever Briggs & Stratton genuine service parts are sold.

For engines equipped with a FRESH START® fuel cap, use **Briggs & Stratton FRESH START®** available in a drip concentrate cartridge.

There is no need to drain gasoline from the engine if a fuel stabilizer is added according to instructions. Run the engine for 2 minutes to circulate the stabilizer throughout the fuel system before storage.

If gasoline in the engine has not been treated with a fuel stabilizer, it must be drained into an approved container. Run the engine until it stops from lack of fuel. The use of a fuel stabilizer in the storage container is recommended to maintain freshness.

Change Oil

While engine is still warm, drain oil from crankcase. Refill with recommended grade. See *Changing Engine Oil* in *Engine Maintenance.*

Protecting the Pump

To protect the pump from damage caused by mineral deposits or freezing, use PumpSaver, Model 6039, to treat pump. This prevents freeze damage and lubricates pistons and seals.

NOTICE PumpSaver is available as an optional accessory. It is not included with the pressure washer. Contact the nearest authorized service center to purchase PumpSaver.

NOTICE You must protect your unit from freezing temperatures.

- Failure to do so will permanently damage your pump and render your unit inoperable.
- Freeze damage is not covered under warranty.

To use PumpSaver, make sure the pressure washer is turned off and disconnected from supply water. Read and follow all instructions and warnings given on the PumpSaver container.

Other Storage Tips

1. DO NOT store fuel from one season to another unless it has been treated as described in *Protect Fuel System.*
2. Replace fuel container if it starts to rust. Rust and/or dirt in fuel can cause problems if it's used with this unit.
3. Cover unit with a suitable protective cover that does not retain moisture.

▲ WARNING Storage covers could cause a fire resulting in death or serious injury.

- DO NOT place a storage cover over a hot pressure washer.
- Let equipment cool for a sufficient time before placing the cover on the equipment.

4. Store unit in a clean and dry area.

Troubleshooting

Problem	Cause	Correction
Pump has following problems: failure to produce pressure, erratic pressure, chattering, loss of pressure, low water volume.	1. Low pressure spray tip installed. 2. Water inlet is blocked. 3. Inadequate water supply. 4. Inlet hose is kinked or leaking. 5. Clogged inlet hose screen. 6. Water supply is over 100°F. 7. High pressure hose is blocked or leaks. 8. Spray gun leaks. 9. Spray tip is obstructed. 10. Pump is faulty.	1. Replace with high pressure spray tip. 2. Clear inlet. 3. Provide adequate water flow. 4. Straighten inlet hose, patch leak. 5. Check and clean inlet hose screen. 6. Provide cooler water supply. 7. Clear blocks in outlet hose. 8. Replace spray gun. 9. Clean spray tip. 10. Contact local service facility.
Detergent fails to mix with spray.	1. Detergent siphoning tube is not submerged. 2. Detergent siphoning tube/filter is clogged or cracked. 3. High pressure spray tip installed. 4. Detergent siphoning check ball stuck.	1. Insert detergent siphoning tube into detergent. 2. Clean or replace filter/detergent siphoning tube. 3. Replace with low pressure spray tip. 4. Free detergent siphoning check ball.
Engine runs good at no-load but "bogs" when load is added.	Engine speed is too slow.	Move throttle control to FAST position. If engine still "bogs down", contact local service facility.
Engine will not start; starts and runs rough, or shuts down during operation.	1. Low oil level. 2. Dirty air cleaner. 3. Out of fuel. 4. Stale fuel. 5. Spark plug wire not connected to spark plug. 6. Bad spark plug. 7. Water in fuel. 8. Excessively rich fuel mixture.	1. Fill crankcase to proper level. 2. Clean or replace air cleaner. 3. Fill fuel tank. 4. Drain fuel tank; fill with fresh fuel. 5. Connect wire to spark plug. 6. Replace spark plug. 7. Drain fuel tank; fill with fresh fuel. 8. Contact local service facility.
Engine lacks power.	Dirty air filter.	Replace air filter.

Warranties

California, U.S. EPA, and Briggs & Stratton Corporation Emissions Control Warranty Statement

Your Warranty Rights And Obligations

The California Air Resources Board, U.S. EPA, and Briggs & Stratton (B&S) are pleased to explain the emissions control system warranty on your Model Year 2012-2013 engine/equipment. In California, new small off-road engines and large spark ignited engines less than or equal to 1.0 liter must be designed, built, and equipped to meet the State's stringent anti-smog standards. B&S must warrant the emissions control system on your engine/equipment for the periods of time listed below provided there has been no abuse, neglect, or improper maintenance of your engine or equipment.

Your emissions control system may include parts such as the carburetor or fuel injection system, ignition system, and catalytic converter. Also included may be hoses, belts, connectors, sensors, and other emissions-related assemblies. Your evaporative emission control system may include parts such as: carburetors, fuel tanks, fuel lines, fuel caps, valves, canisters, filters, vapor hoses, clamps, connectors, and other associated components. Where a warrantable condition exists, B&S will repair your engine/equipment at no cost to you including diagnosis, parts, and labor.

Manufacturer's Warranty Coverage:

Small off-road engines and large spark ignited engines less than or equal to 1.0 liter, and any emissions related components of the equipment, are warranted for two years*. If any emissions-related part on your engine/equipment is defective, the part will be repaired or replaced by B&S.

* Two years or for the time period listed in the respective engine or product warranty statement, whichever is greater.

Owner's Warranty Responsibilities:

- As the engine/equipment owner, you are responsible for the performance of the required maintenance listed in your owner's manual. B&S recommends that you retain all receipts covering maintenance on your engine/equipment, but B&S cannot deny warranty solely for the lack of receipts or your failure to ensure the performance of all scheduled maintenance.
- As the engine/equipment owner, you should however be aware that B&S may deny you warranty coverage if your engine/equipment or a part has failed due to abuse, neglect, improper maintenance, or unapproved modifications.
- You are responsible for presenting your engine/equipment to a B&S distribution center, servicing dealer, or other equivalent entity, as applicable, as soon as a problem exists. The warranty repairs should be completed in a reasonable amount of time, not to exceed 30 days. If you have any questions regarding your warranty rights and responsibilities, you should contact B&S at (414) 259-5262.

Briggs & Stratton Emissions Control Warranty Provisions

The following are specific provisions relative to your Emissions Control Warranty Coverage. It is in addition to the B&S engine warranty for non-regulated engines found in the Operator's Manual.

1. Warranted Emissions Parts
   Coverage under this warranty extends only to the parts listed below (the emissions control systems parts) to the extent these parts were present on the B&S engine and/or B&S supplied fuel system.
   a. Fuel Metering System
      - Cold start enrichment system (soft choke)
      - Carburetor and internal parts
      - Fuel pump
      - Fuel line, fuel line fittings, clamps
      - Fuel tank, cap and tether
      - Carbon canister
   b. Air Induction System
      - Air cleaner
      - Intake manifold
      - Purge and vent line
   c. Ignition System
      - Spark plug(s)
      - Magneto ignition system
   d. Catalyst System
      - Catalytic converter
      - Exhaust manifold
      - Air injection system or pulse valve
   e. Miscellaneous Items Used in Above Systems
      - Vacuum, temperature, position, time sensitive valves and switches
      - Connectors and assemblies
2. Length of Coverage
   For a period of two years from date of original purchase*, B&S warrants to the original purchaser and each subsequent purchaser that the engine is designed, built, and equipped so as to conform with all applicable regulations adopted by the Air Resources Board; that it is free from defects in material and workmanship that could cause the failure of a warranted part; and that it is identical in all material respects to the engine described in the manufacturer's application for certification. The warranty period begins on the date the engine is originally purchased.

   * Two years or for the time period listed in the respective engine or product warranty statement, whichever is greater.

The warranty on emissions-related parts is as follows:

- Any warranted part that is not scheduled for replacement as required maintenance in the owner's manual supplied, is warranted for the warranty period stated above. If any such part fails during the period of warranty coverage, the part will be repaired or replaced by B&S at no charge to the owner. Any such part repaired or replaced under the warranty will be warranted for the remaining warranty period.
- Any warranted part that is scheduled only for regular inspection in the owner's manual supplied, is warranted for the warranty period stated above. Any such part repaired or replaced under warranty will be warranted for the remaining warranty period.
- Any warranted part that is scheduled for replacement as required maintenance in the owner's manual supplied, is warranted for the period of time prior to the first scheduled replacement point for that part. If the part fails prior to the first scheduled replacement, the part will be repaired or replaced by B&S at no charge to the owner. Any such part repaired or replaced under warranty will be warranted for the remainder of the period prior to the first scheduled replacement point for the part.
- Add on or modified parts that are not exempted by the Air Resources Board may not be used. The use of any non exempted add on or modified parts by the owner will be grounds for disallowing a warranty claim. The manufacturer will not be liable to warrant failures of warranted parts caused by the use of a non exempted add on or modified part.

3. Consequential Coverage

   Coverage shall extend to the failure of any engine components caused by the failure of any warranted emissions parts.

4. Claims and Coverage Exclusions

   Warranty claims shall be filed according to the provisions of the B&S engine warranty policy. Warranty coverage does not apply to failures of emissions parts that are not original equipment B&S parts or to parts that fail due to abuse, neglect, or improper maintenance as set forth in the B&S engine warranty policy. B&S is not liable for warranty coverage of failures of emissions parts caused by the use of add-on or modified parts.

Look For Relevant Emissions Durability Period and Air Index Information On Your Small Off-Road Engine Emissions Label

Engines that are certified to meet the California Air Resources Board (CARB) small off-road Emissions Standard must display information regarding the Emissions Durability Period and the Air Index. Briggs & Stratton makes this information available to the consumer on our emissions labels. The engine emissions label will indicate certification information.

The **Emissions Durability Period** describes the number of hours of actual running time for which the engine is certified to be emissions compliant, assuming proper maintenance in accordance with the Operating & Maintenance Instructions. The following categories are used:

Moderate:
Engine is certified to be emissions compliant for 125 hours of actual engine running time.

Intermediate:
Engine is certified to be emissions compliant for 250 hours of actual engine running time.

Extended:
Engine is certified to be emissions compliant for 500 hours of actual engine running time.

For example, a typical walk-behind lawn mower is used 20 to 25 hours per year. Therefore, the **Emissions Durability Period** of an engine with an **intermediate** rating would equate to 10 to 12 years.

Briggs & Stratton engines are certified to meet the United States Environmental Protection Agency (USEPA) Phase 2 or Phase 3 emissions standards. The Emissions Compliance Period referred to on the Emissions Compliance label indicates the number of operating hours for which the engine has been shown to meet Federal emissions requirements.

For engines less than 225 cc displacement.
Category C = 125 hours
Category B = 250 hours
Category A = 500 hours

For engines of 225 cc or more displacement.
Category C = 250 hours
Category B = 500 hours
Category A = 1000 hours

TROY-BILT® PRESSURE WASHER OWNER WARRANTY POLICY

Effective November 1, 2012; replaces all undated Warranties and all Warranties dated before November 1, 2012.

LIMITED WARRANTY

Troy-Bilt® is a registered trademark of MTD Products Inc. and is used under license to Briggs & Stratton Power Products. Briggs & Stratton warrants that, during the warranty period specified below, it will repair or replace, free of charge, any part that is defective in material or workmanship or both. Transportation charges on product submitted for repair or replacement under this warranty must be borne by purchaser. This warranty is effective for and is subject to the time periods and conditions stated below. For warranty service, find the nearest Authorized Service Dealer in our dealer locator map at BRIGGSandSTRATTON.com. The purchaser must contact the Authorized Service Dealer, and then make the product available to the Authorized Service Dealer for inspection and testing.

There is no other express warranty. Implied warranties, including those of merchantability and fitness for a particular purpose, are limited to one year from purchase, or to the extent permitted by law. All other implied warranties are excluded. Liability for incidental or consequential damages are excluded to the extent exclusion is permitted by law. Some states or countries do not allow limitations on how long an implied warranty lasts, and some states or countries do not allow the exclusion or limitation of incidental or consequential damages, so the above limitation and exclusion may not apply to you. This warranty gives you specific legal rights and you may also have other rights which vary from state to state or country to country.**

WARRANTY PERIOD

Consumer Use	**2 years**
Commercial Use	**90 days**

** In Australia - Our goods come with guarantees that cannot be excluded under the Australian Consumer Law. You are entitled to a replacement or refund for a major failure and for compensation for any other reasonably foreseeable loss or damage. You are also entitled to have the goods repaired or replaced if the goods fail to be of acceptable quality and the failure does not amount to a major failure. For warranty service, find the nearest Authorized Service Dealer in our dealer locator map at BRIGGSandSTRATTON.COM, or by calling 1300 274 447, or by emailing or writing to salesenquires@briggsandstratton.com.au, Briggs & Stratton Australia Pty Ltd, 1 Moorebank Avenue, NSW, Australia, 2170.

The warranty period begins on the date of purchase by the first retail consumer or commercial end user, and continues for the period of time stated above. "Consumer use" means personal residential household use by a retail consumer. "Commercial use" means all other uses, including use for commercial, income producing or rental purposes. Once equipment has experienced commercial use, it shall thereafter be considered as commercial use for purposes of this warranty.

NO WARRANTY REGISTRATION IS NECESSARY TO OBTAIN WARRANTY ON BRIGGS & STRATTON PRODUCTS. SAVE YOUR PROOF OF PURCHASE RECEIPT. IF YOU DO NOT PROVIDE PROOF OF THE INITIAL PURCHASE DATE AT THE TIME WARRANTY SERVICE IS REQUESTED, THE MANUFACTURING DATE OF THE PRODUCT WILL BE USED TO DETERMINE THE WARRANTY PERIOD.

ABOUT YOUR WARRANTY

We welcome warranty repair and apologize to you for being inconvenienced. Any Authorized Service Dealer may perform warranty repairs. Most warranty repairs are handled routinely, but sometimes requests for warranty service may not be appropriate. For example, warranty service would not apply if equipment damage occurred because of misuse, lack of routine maintenance, shipping, handling, warehousing or improper installation. Similarly, the warranty is void if the manufacturing date or the serial number on the pressure washer or engine has been removed or the equipment has been altered or modified. During the warranty period, the Authorized Service Dealer, at its option, will repair or replace any part that, upon examination, is found to be defective under normal use and service. This warranty will not cover the following repairs and equipment:

- **Normal Wear:** Outdoor Power Equipment, like all mechanical devices, needs periodic parts and service to perform well. This warranty also does not cover normal maintenance such as air filters, adjustments, fuel system cleaning and obstruction (due to chemical, lime, dirt, and so forth).
- **Installation and Maintenance:** This warranty does not apply to equipment or parts that have been subjected to improper or unauthorized installation or alteration and modification, misuse, negligence, accident, overloading, overspeeding, improper maintenance, repair or storage so as, in our judgment, to adversely affect its performance and reliability. This warranty also does not cover normal maintenance such as air filters, adjustments, fuel system cleaning and obstruction (due to chemical, lime, dirt, and so forth).
- **Other Exclusions:** This warranty excludes wear items such as quick couplers, seals, o-rings, pumps that have been run without water supplied or damage or malfunctions resulting from accidents, abuse, modifications, alterations, or improper servicing or freezing or chemical deterioration. Accessory parts, such as guns, hoses, nozzle extensions (wands), and nozzles, are excluded from the product warranty. This warranty excludes used, reconditioned, and demonstration equipment and failures due to acts of God and other force majeure events beyond the manufacturers control.

198186E, Rev. E, 10/18/2012

BRIGGS & STRATTON POWER PRODUCTS GROUP, LLC
MILWAUKEE, WI, USA

Pressure Washer

Product Specifications

Outlet Pressure	2,200 PSI (151.7 BARS)*
Flow Rate	1.8 GPM (6.8 liters/min)
Water Supply Temperature	100°F (38°C) MAX
Displacement	9.67 cu. in. (158 cc)
Spark Plug Gap	0.030 in. (0.76 mm)
Fuel Capacity	1.0 Qt. (0.95 Liters)
Oil Capacity	18 Ounces (0.53 Liters)

Common Service Parts

PumpSaver	6039
O-Ring Maintenance Kit	196002GS
Water Inlet Screen	B2384GS
Air Cleaner	698369 or 5088
Resistor Spark Plug	802592 or 5095
Long Life Platinum Spark Plug	5062
Engine Oil Bottle	100005 or 100028
Fuel Stabilizer	100120 or 100117
Spark Arrester	398067

Power Ratings: The gross power rating for individual gas engine models is labeled in accordance with SAE (Society of Automotive Engineers) code J1940 (Small Engine Power & Torque Rating Procedure), and rating performance has been obtained and corrected in accordance with SAE J1995 (Revision 2002-05). Torque values are derived at 3060 RPM; horsepower values are derived at 3600 RPM. The gross power curves can be viewed at www.BRIGGSandSTRATTON.COM. Net power values are taken with exhaust and air cleaner installed whereas gross power values are collected without these attachments. Actual gross engine power will be higher than net engine power and is affected by, among other things, ambient operating conditions and engine-to-engine variability. Given the wide array of products on which engines are placed, the gas engine may not develop the rated gross power when used in a given piece of power equipment. This difference is due to a variety of factors including, but not limited to, the variety of engine components (air cleaner, exhaust, charging, cooling, carburetor, fuel pump, etc.), application limitations, ambient operating conditions (temperature, humidity, altitude), and engine-to-engine variability. Due to manufacturing and capacity limitations, Briggs & Stratton may substitute an engine of higher rated power for this Series engine.

* This pressure washer is rated in accordance to the Pressure Washer Manufacturers Association (PWMA) standard PW101-2010 (Testing and Rating Performance of Pressure Washers).

Briggs & Stratton Power Products Group, LLC
P.O. Box 702
Milwaukee, Wisconsin, 53201-0702 U.S.A.

(888) 611-6708